Számítógéppel Integrált Gyártás

Cella-alapú Gyártás

MSC Mechatronikai mérnök szak Gyártórendszerek mechatronikája szakirány

BMEGE GTMK42

Gyártástudomány és -Technológia Tanszék

Dr. Monostori László egyetemi tanár

Dr. Mezgár István egyetemi docens

Tipikus CIM környezet

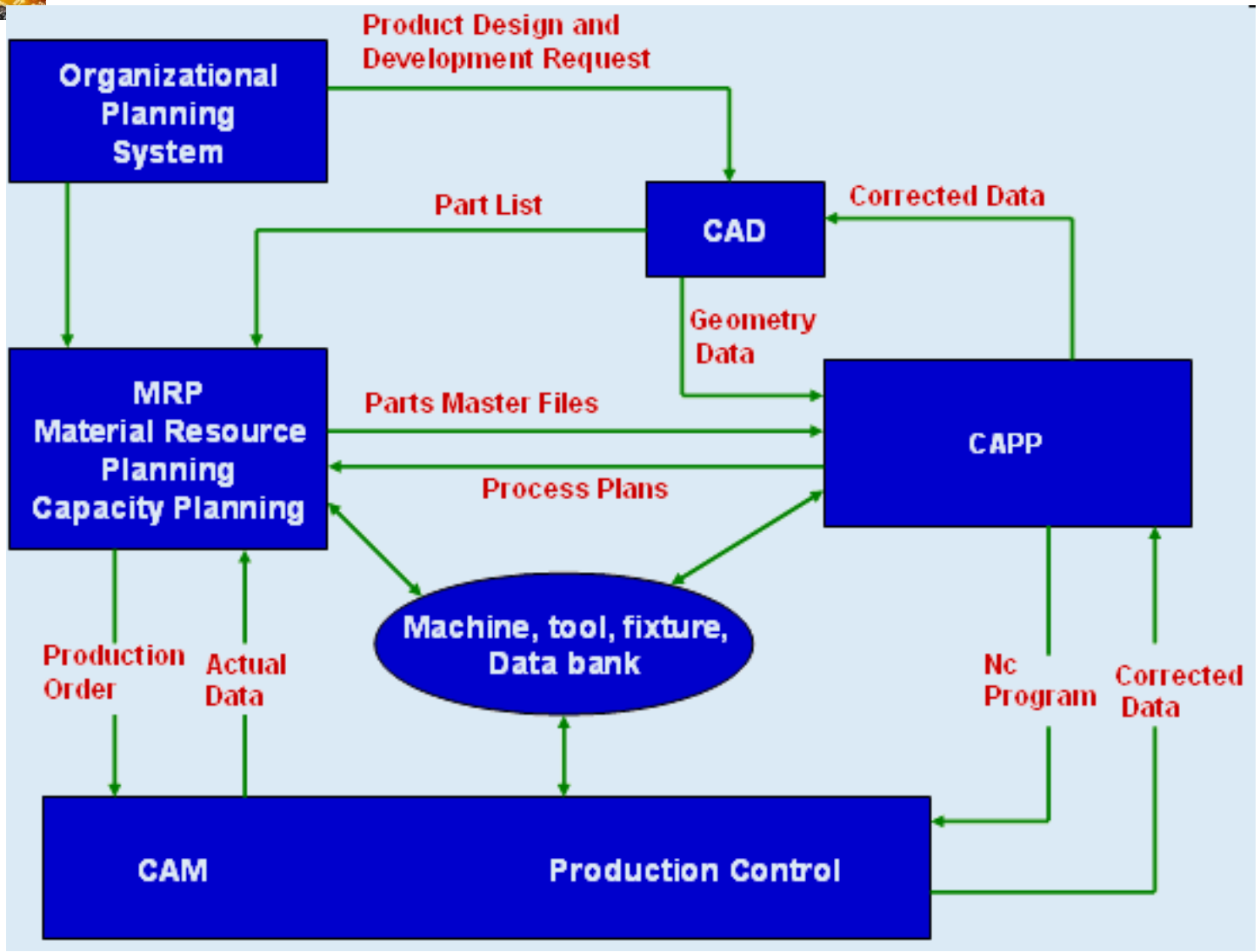

Cellular Manufacturing
Cella-alapú Gyártás

Előadás struktúrája:

1. Part Families
2. Parts Classification and Coding
3. Production Flow Analysis
4. Cellular Manufacturing
5. Applications in Group Technology
6. Quantitative Analysis in Cellular Manufacturing

Csoporttechnológia Definíciója Group Technology (GT)

A manufacturing philosophy in which similar parts are identified and grouped together to take advantage of their similarities in design and production

- Similarities among parts permit them to be classified into part families
  - In each part family, processing steps are similar
- The improvement is typically achieved by organizing the production facilities into manufacturing cells that specialize in production of certain part families

Csoporttechnológia Áttekintése

- Parts in the medium production quantity range are usually made in batches
- Disadvantages of batch production:
  - Downtime for changeovers
  - High inventory carrying costs
- GT minimizes these disadvantages by recognizing that although the parts are different, there are groups of parts that possess similarities

Part Families and Cellular Manufacturing

- GT exploits the part similarities by utilizing similar processes and tooling to produce them
- Machines are grouped into cells, each cell specializing in the production of a part family
  - Called *cellular manufacturing*
- Cellular manufacturing can be implemented by manual or automated methods
  - When automated, the term *flexible manufacturing system* is often applied

When to Use GT and Cellular Manufacturing

1. The plant currently uses traditional batch production and a process type layout
   - This results in much material handling effort, high in-process inventory, and long manufacturing lead times
2. The parts can be grouped into part families
   - A necessary condition to apply group technology
   - Each machine cell is designed to produce a given part family, or a limited collection of part families, so it must be possible to group parts made in the plant into families

Problems in Implementing GT

1. Identifying the part families
   - Reviewing all of the parts made in the plant and grouping them into part families is a substantial task
2. Rearranging production machines into GT cells
   - It is time-consuming and costly to physically rearrange the machines into cells, and the machines are not producing during the changeover

Part Family

A collection of parts that possess similarities in geometric shape and size, or in the processing steps used in their manufacture

- Part families are a central feature of group technology
  - There are always differences among parts in a family
  - But the similarities are close enough that the parts can be grouped into the same family

Part Families

- Two parts that are identical in shape and size but quite different in manufacturing: (a) 1,000,000 units/yr, tolerance = ±0.010 inch, 1015 CR steel, nickel plate; (b) 100/yr, tolerance = ±0.001 inch, 18-8 stainless steel

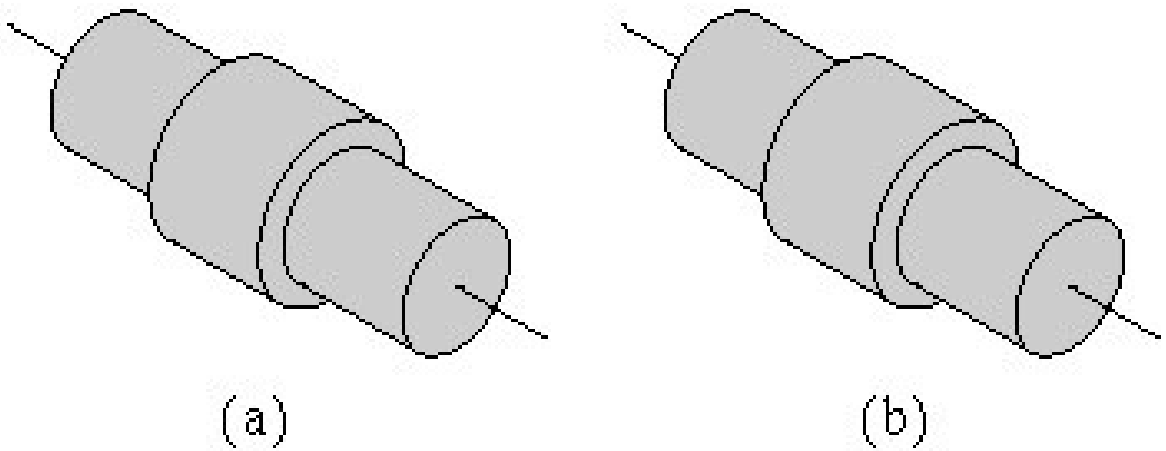

Part Families

- Ten parts are different in size, shape, and material, but quite similar in terms of manufacturing
- All parts are machined from cylindrical stock by turning; some parts require drilling and/or milling

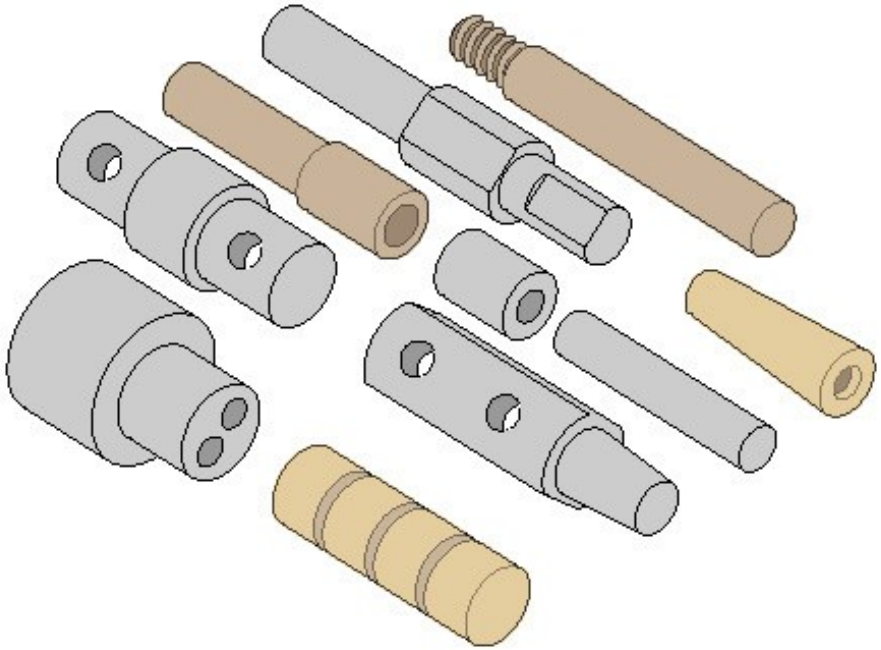

Traditional Process Layout

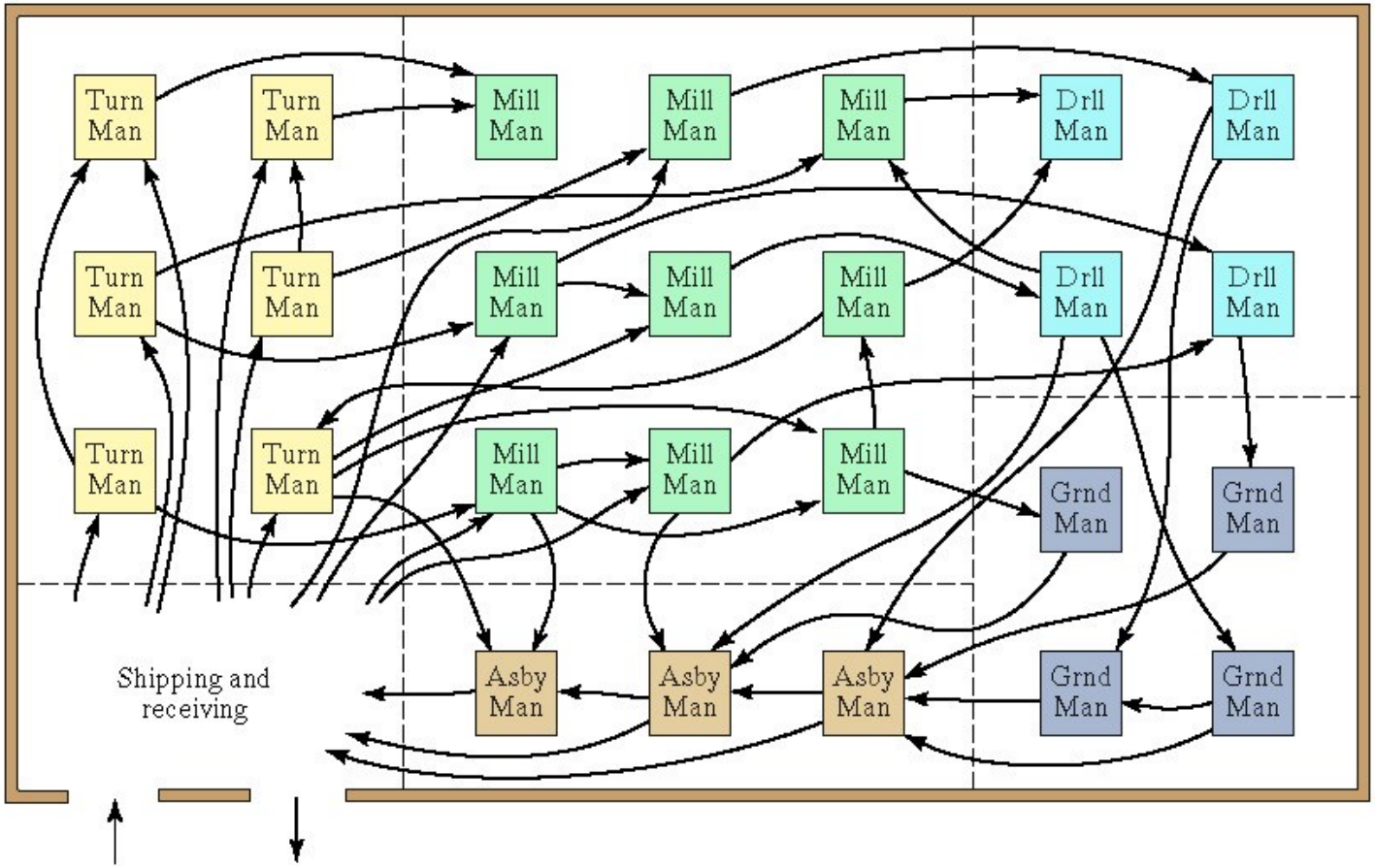

Cellular Layout Based on GT

- Each cell specializes in producing one or a limited number of part families

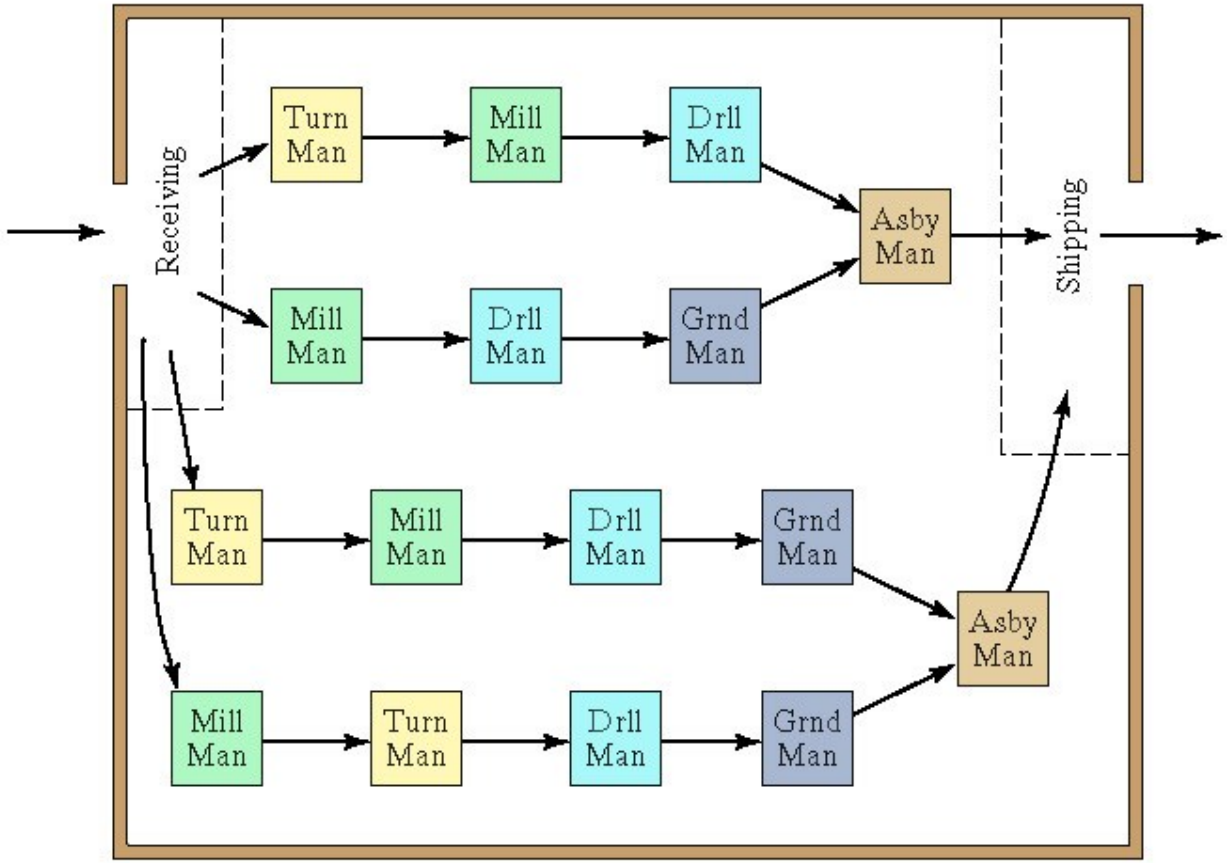

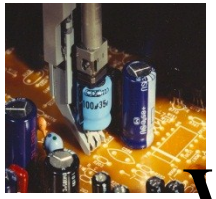

Ways to Identify Part Families

1. Visual inspection
   - Using best judgment to group parts into appropriate families, based on the parts or photos of the parts
2. Parts classification and coding
   - Identifying similarities and differences among parts and relating them by means of a coding scheme
3. Production flow analysis
   - Using information contained on route sheets to classify parts

Parts Classification and Coding

Identification of similarities among parts and relating the similarities by means of a numerical coding system

- Most time consuming of the three methods
- Must be customized for a given company or industry
- Reasons for using a coding scheme:
  - Design retrieval
  - Automated process planning
  - Machine cell design

Features of Parts Classification and Coding Systems

- Most classification and coding systems are based on one of the following:
  - Part design attributes
  - Part manufacturing attributes
  - Both design and manufacturing attributes

Part Design Attributes

- Major dimensions
- Basic external shape
- Basic internal shape
- Length/diameter ratio
- Material type
- Part function
- Tolerances
- Surface finish

Part Manufacturing Attributes

- Major process
- Operation sequence
- Batch size
- Annual production
- Machine tools
- Cutting tools
- Material type

Coding Scheme Structures

1. Hierarchical structure (monocode)
   - Interpretation of each successive digit depends on the value of the preceding digit
2. Chain-type structure (polycode)
   - Interpretation of each symbol is always the same
   - No dependence on previous digits
3. Mixed-code structure
   - Combination of hierarchical and chain-type structures

Opitz Classification System

- One of the first published classification and coding schemes for mechanical parts
- Basic code = nine (9) digits
  - Digits 1 through 5 = form code – primary shape and design attributes (hierarchical structure)
  - Digits 6 through 9 = supplementary code – attributes that are useful in manufacturing (e.g., dimensions, starting material)
  - Digits 10 through 13 = secondary code – production operation type and sequence

Basic Structure of Opitz System

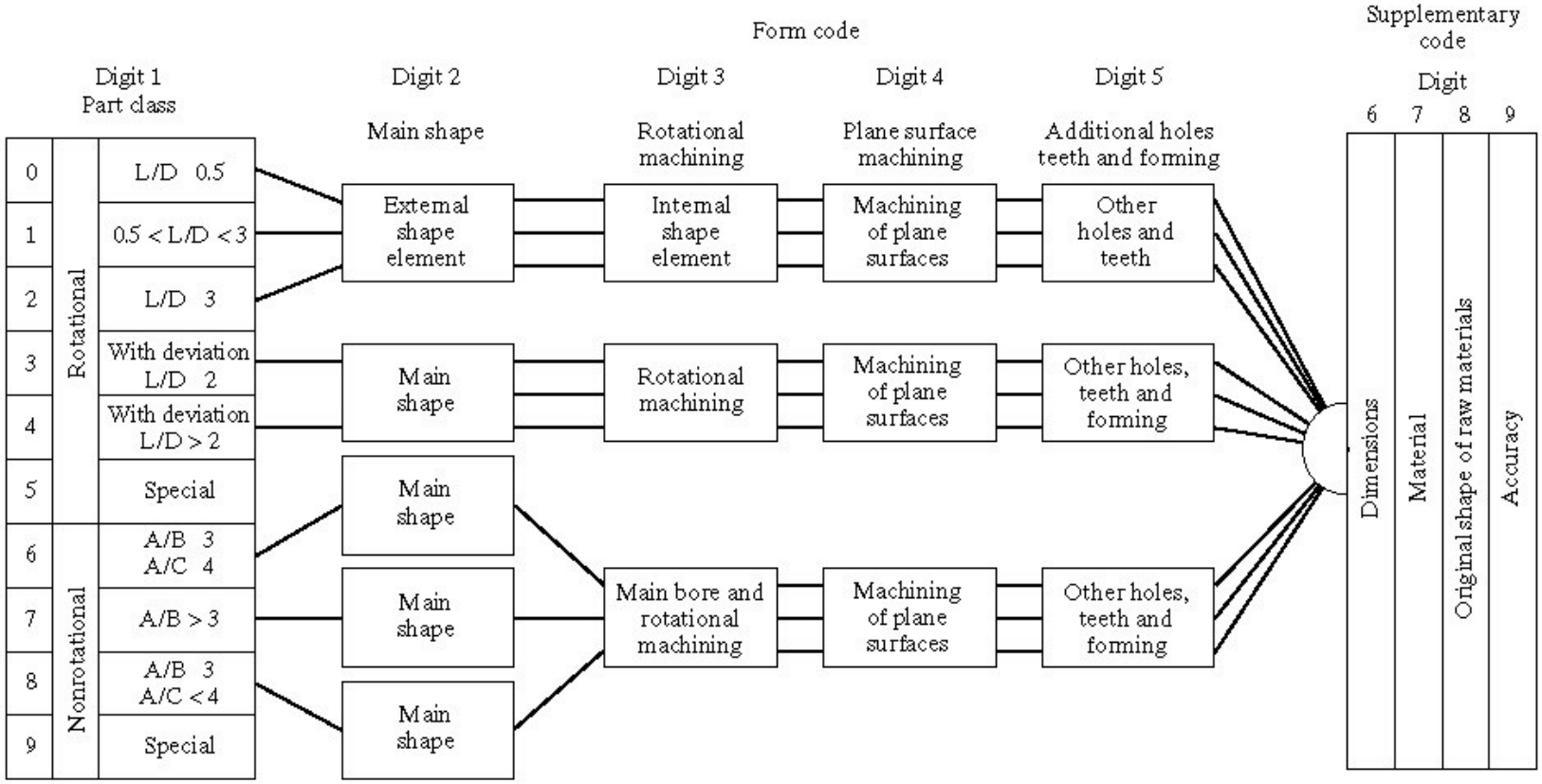

Opitz Form Code (Digits 1 through 5)

	Digit 1		Digit 2				Digit 3				Digit 4		Digit 5		
		Part class				External shape, external shape elements				Internal shape, internal shape elements		Plane surface machining			Auxiliary holes and gear teeth
0	Rotational parts	L/D 0.5	0			Smooth, no shape elements	0			No hole, no breakthrough	0	No surface machining	0	No gear teeth	No auxiliary hole
1		0.5 < L/D < 3	1	Stepped to one end		No shape elements	1	Smooth or stepped to one end		No shape elements	1	Surface plane and/or curved in one direction, external	1		Axial, not on pitch circle diameter
2		L/D 3	2		or smooth	Thread	2			Thread	2	External plane surface related by graduation around the circle	2		Axial on pitch circle diameter
3			3			Functional groove	3			Functional groove	3	External groove and/or slot	3		Radial, not on pitch circle diameter
4			4	Stepped to both ends		No shape elements	4	Stepped to both ends		No shape elements	4	External spline (polygon)	4		Axial and/or radial and/or other direction
5			5			Thread	5			Thread	5	External plane surface and/or slot, external spline	5		Axial and/or radial on PCD and/or other directions
6	Nonrotational parts		6			Functional groove	6			Functional groove	6	Internal plane surface and/or slot	6	With gear teeth	Spur gear teeth
7			7	Functional cone			7	Functional cone			7	Internal spline (polygon)	7		Bevel gear teeth
8			8	Operating thread			8	Operating thread			8	Internal and external polygon, groove and/or slot	8		Other gear teeth
9			9	All others			9	All others			9	All others	9		All others

Example: Opitz Form Code

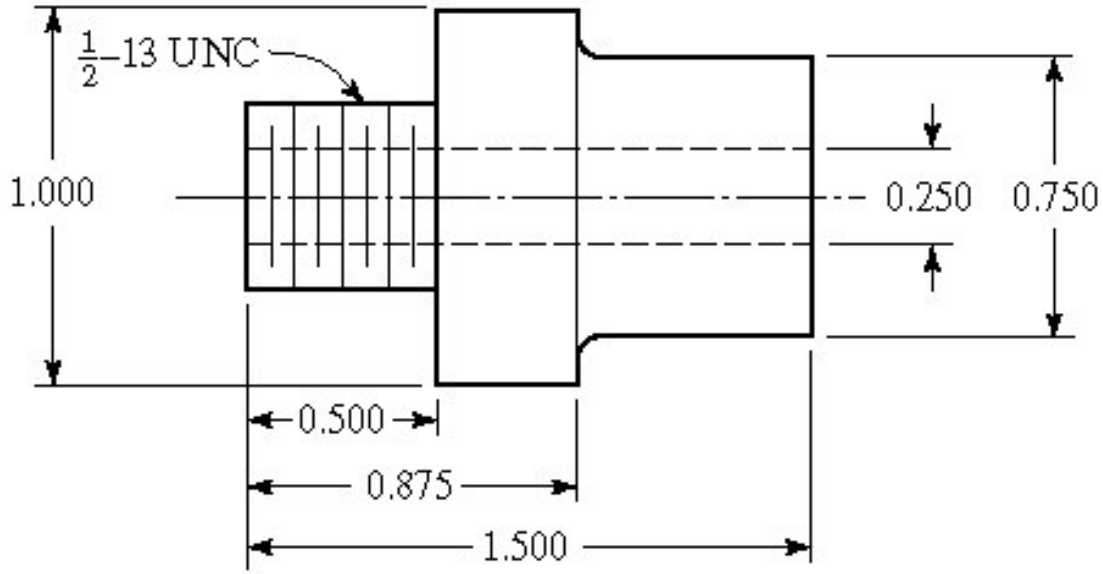

Form code in Opitz system is 15100

Production Flow Analysis (PFA)

Method for identifying part families and associated machine groupings based on production route sheets rather than part design data

- Workparts with identical or similar route sheets are classified into part families
- Advantages of using route sheet data
  - Parts with different geometries may nevertheless require the same or similar processing
  - Parts with nearly the same geometries may nevertheless require different processing

Steps in Production Flow Analysis

1. Data collection – operation sequence and machine routing for each part
2. Sortation of process routings – parts with same sequences and routings are arranged into “packs”
3. PFA chart – each pack is displayed on a PFA chart
   - Also called a *part-machine incidence matrix*
4. Cluster analysis – purpose is to collect packs with similar routings into groups
   - Each machine group = a machine cell

Cellular Manufacturing

Application of group technology in which dissimilar machines or processes are aggregated into cells, each of which is dedicated to the production of a part family or limited group of families

- Typical objectives of cellular manufacturing:
  - To shorten manufacturing lead times
  - To reduce WIP
  - To improve quality
  - To simplify production scheduling
  - To reduce setup times

Composite Part Concept

A *composite part* for a given family is a hypothetical part that includes all of the design and manufacturing attributes of the family

- In general, an individual part in the family will have some of the features of the family, but not all of them
- A production cell for the part family would consist of those machines required to make the composite part
- Such a cell would be able to produce any family member, by omitting operations corresponding to features not possessed by that part

Composite Part Concept

Composite part concept: (a) the composite part for a family of machined rotational parts, and (b) the individual features of the composite part

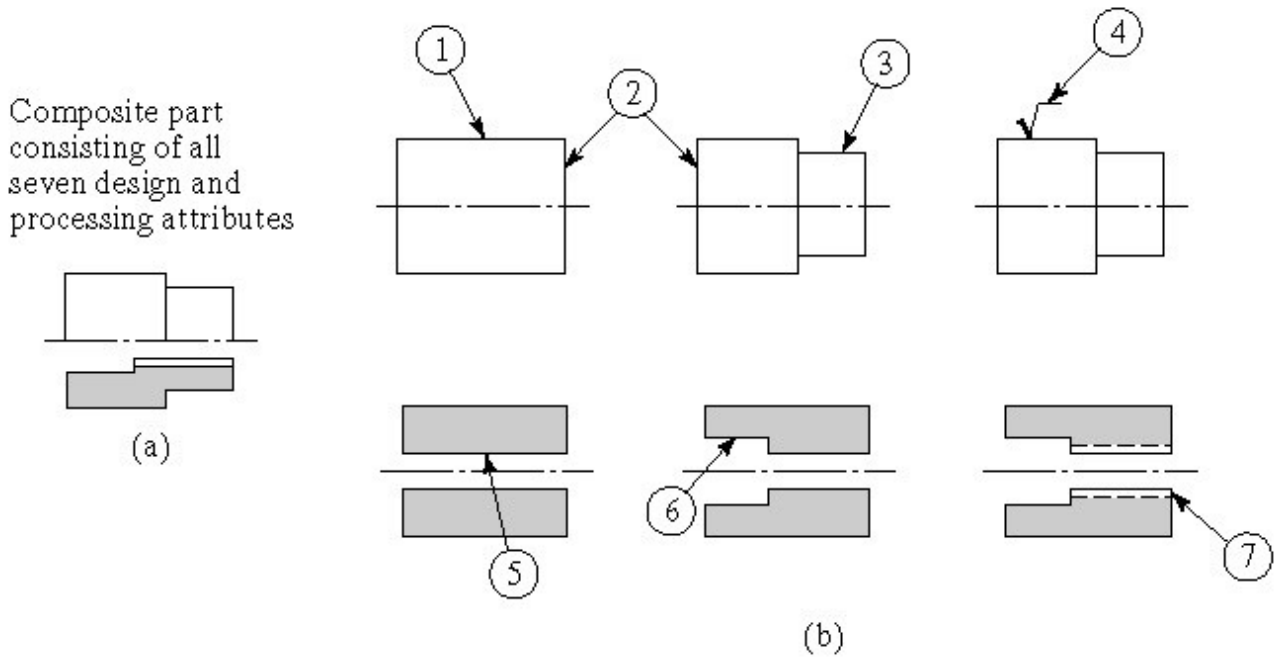

Part Features and Corresponding Manufacturing Operations

	Design feature	Corresponding operation
1.	External cylinder	Turning
2.	Face of cylinder	Facing
3.	Cylindrical step	Turning
4.	Smooth surface	External cylindrical grinding
5.	Axial hole	Drilling
6.	Counter bore	Counterboring
7.	Internal threads	Tapping

Machine Cell Designs

1. Single machine
2. Multiple machines with manual handling
   - Often organized into U-shaped layout
3. Multiple machines with semi-integrated handling
4. Automated cell – automated processing and integrated handling
   - Flexible manufacturing cell
   - Flexible manufacturing system

Machine Cell with Manual Handling

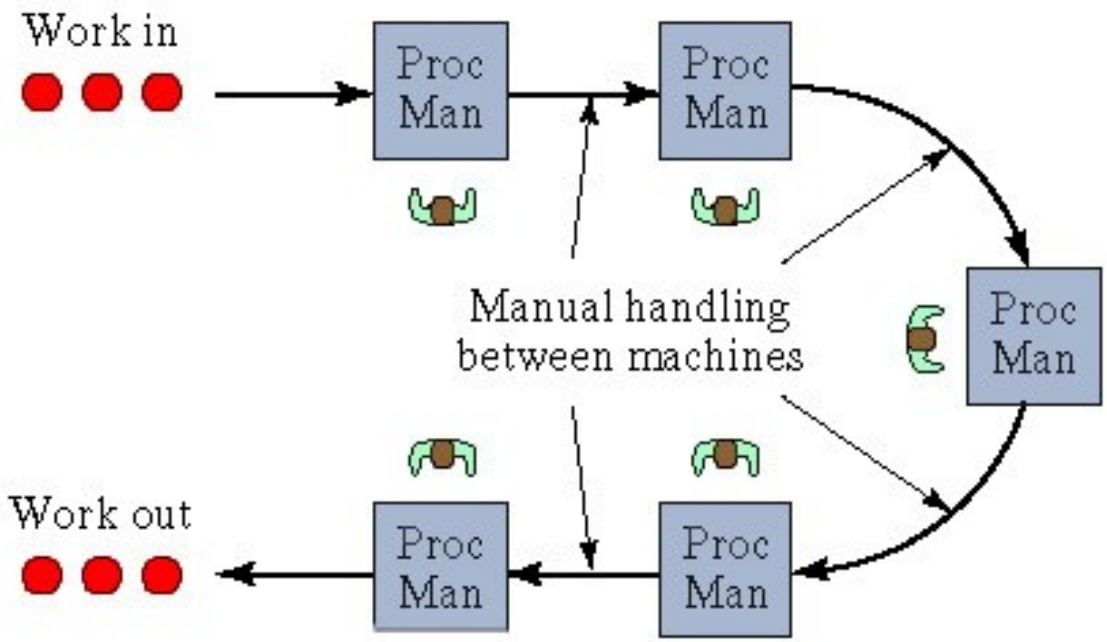

U-shaped machine cell with manual part handling between machines

Cell with Semi-Integrated Handling

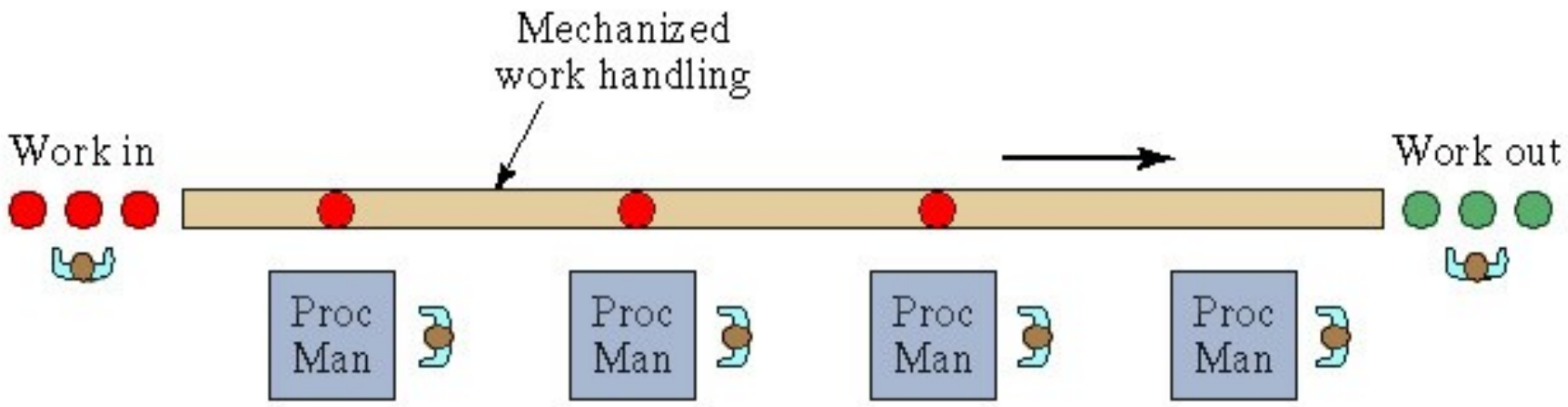

In-line layout using mechanized work handling between machines

Cell with Semi-Integrated Handling

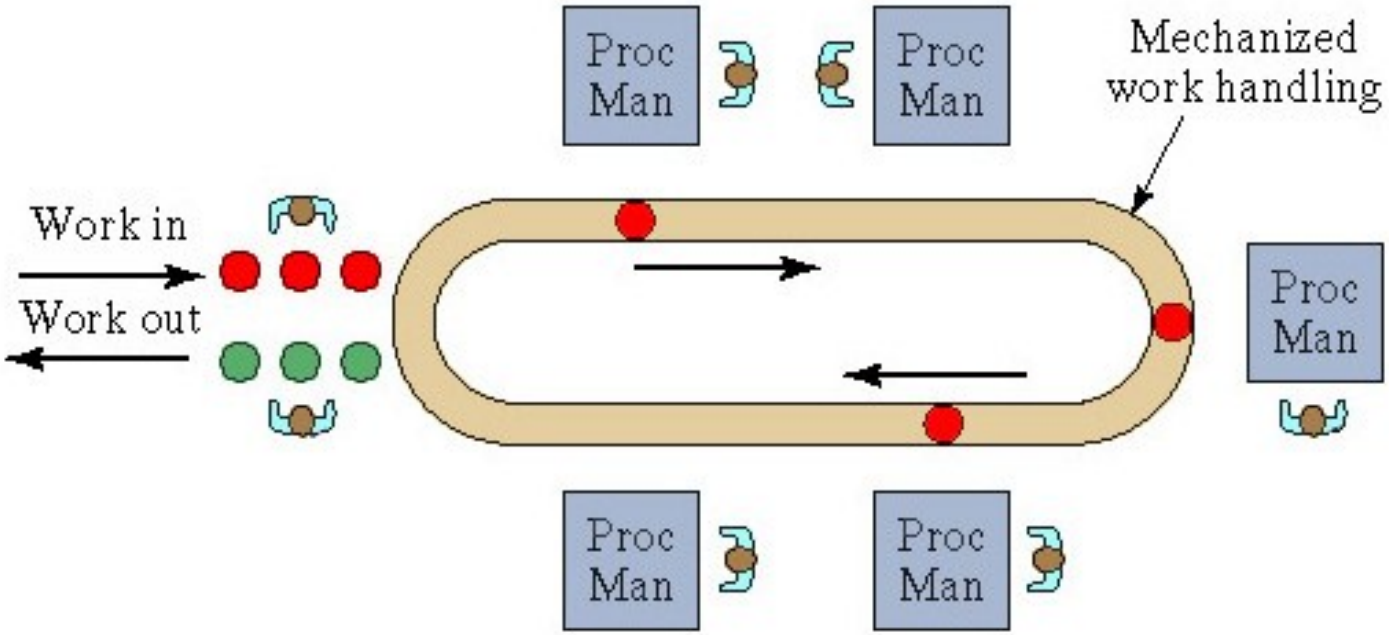

Loop layout allows variations in part routing between machines

Cell with Semi-Integrated Handling

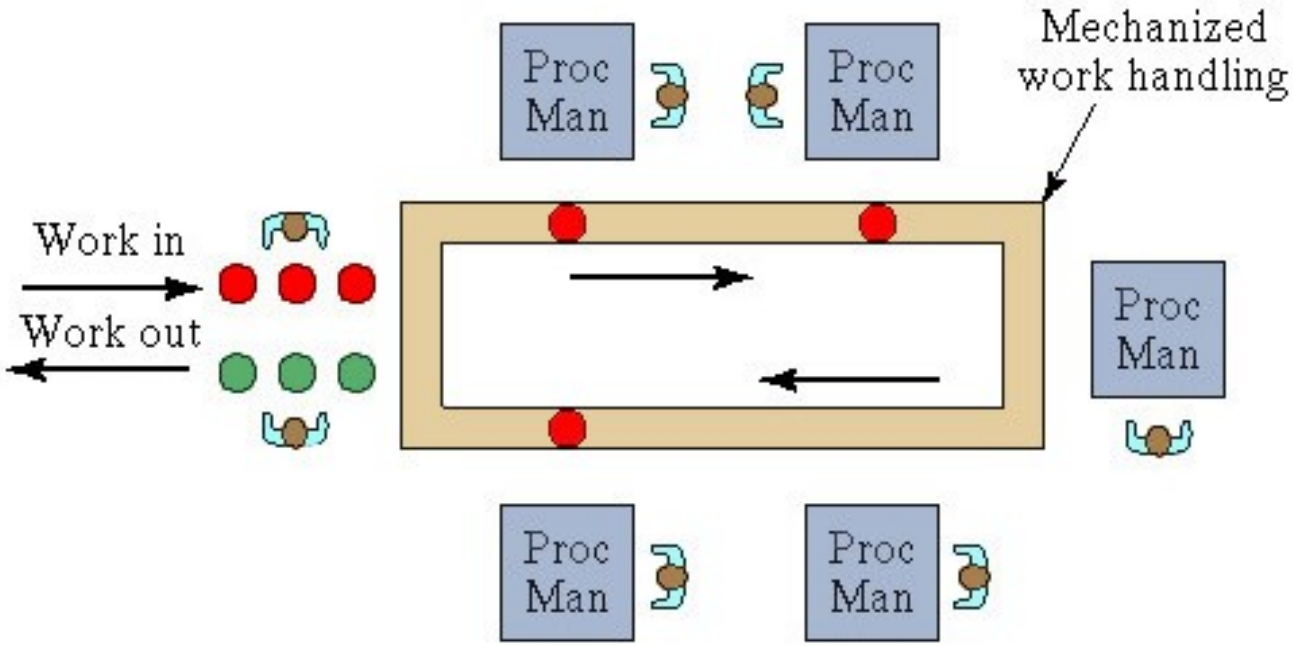

Rectangular layout also allows variations in part routing and allows for return of work carriers if they are used

Four Types of Part Moves in Mixed Model Production System

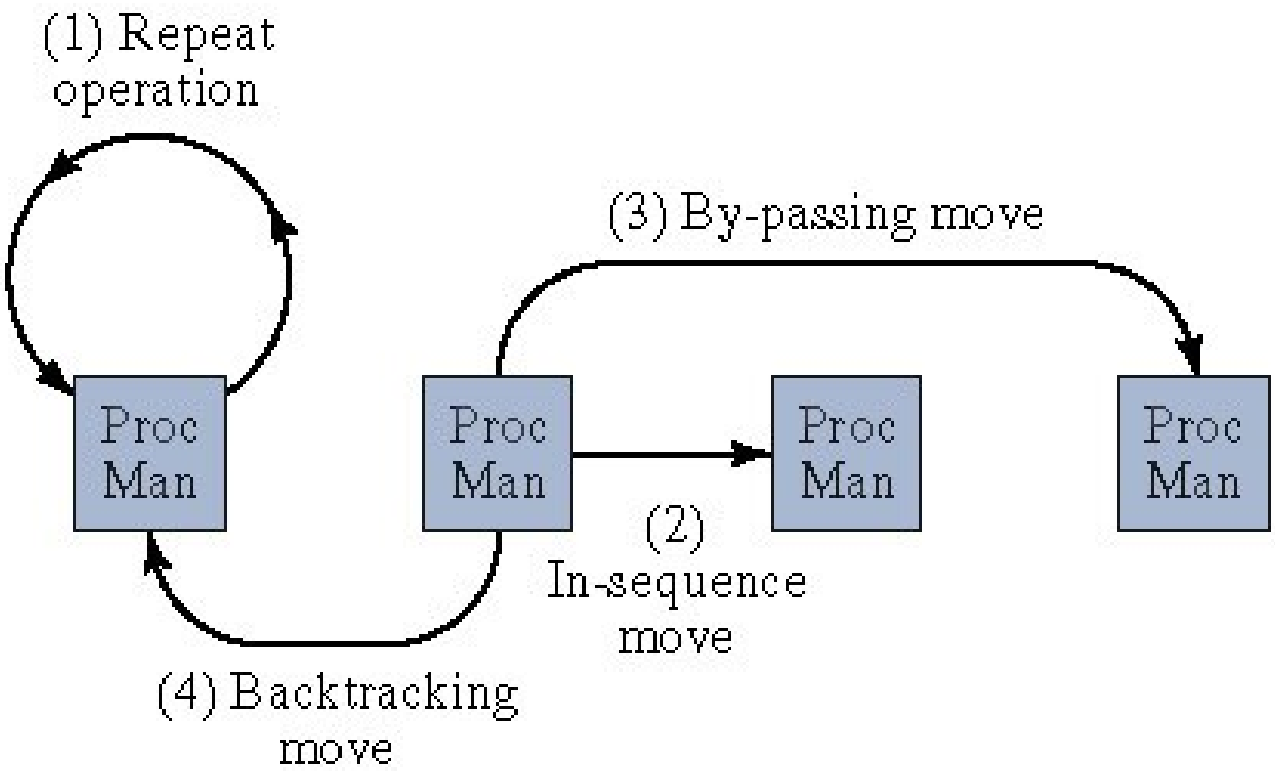

Key Machine Concept

- Applies in cells when there is one machine (the key machine) that is more expensive or performs certain critical operations
  - Other machines in the cell are supporting machines
  - Important to maintain high utilization of key machine, even if this means lower utilization of supporting machines

Manufacturing Applications of Group Technology

- Different ways of forming machine cells:
  - Informal scheduling and routing of similar parts through selected machines to minimize setups
  - Virtual machine cells – dedication of certain machines in the factory to produce part families, but no physical relocation of machines
  - Formal machine cells – machines are physically relocated to form the cells
- Automated process planning
- Modular fixtures
- Parametric programming in NC

Benefits of Group Technology in Manufacturing

- Standardization of tooling, fixtures, and setups is encouraged
- Material handling is reduced
  - Parts are moved within a machine cell rather than the entire factory
- Process planning and production scheduling are simplified
- Work-in-process and manufacturing lead time are reduced
- Improved worker satisfaction in a GT cell
- Higher quality work

Product Design Applications of Group Technology

- Design retrieval systems
  - Industry survey: For new part designs,
    - Existing part design could be used - 20%
    - Existing part design with modifications – 40%
    - New part design required – 40%
- Simplification and standardization of design parameters such as tolerances, chamfers, hole sizes, thread sizes, etc.
  - Reduces tooling and fastener requirements in manufacturing

Quantitative Analysis in Cellular Manufacturing

- Grouping parts and machines by Rank Order Clustering
- Arranging machines in a GT Cell

Köszönöm a figyelmet !